MADE GOODS

KLAYTIN

Concave circles define this pyramid-shaped resin lamp.

MATERIAL
Resin

DIMENSIONS
Overall: 16″L x 9″W x 29″H
Lamp Base: 6′′L x 5′′W x 18′′H
Lamp Shade: 16′′L x 9′′W x 9′′H

SHADE
Rectangle, Linen

SHADE DIFFUSER
Yes

BULB TYPE
Type A - 100 Max. Wattage

UL/CUL CERTIFIED
Yes /Yes

SWITCH TYPE
1-Way

CORD LENGTH FROM BASE
63′′

WEIGHT
9 lbs

FINISHES
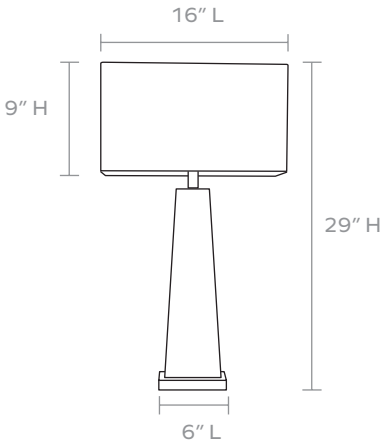
Rustic Gold Leaf