MADE GOODS

JARIN CONSOLE

This traditionally shaped piece, featuring a subtle top lip, comes with generous, sophisticated storage including two drawers and an open shelf. Fully finished in our faux Belgian linen, this latest addition, in both standard size and narrow width, offers a clean look with just the right amount of texture.

MATERIAL

Faux Belgian Linen

DIMENSIONS

A. 48"L x 12"W x 31"H *(Narrow)*
B. 48"L x 18"W x 31"H
C. 60"L x 18"W x 31"H
Floor to Bottom Clearance : 8''

DRAWERS

Number of drawers: 2
Inside drawer: A. 19.75"Lx6.5"Wx3"H
B. 19.75"Lx12.5"Wx3"H
C. 22.75"Lx12.5"Wx3"H
Number of knobs: 2

FREE FLOATING

Yes

WEIGHT

A. 55 lbs
B. 62 lbs
C. 98 lbs

***This item is handcrafted and may show slight variation in size from one piece to another.*

FINISHES

Dark Navy

Designer White

Graphite

Light Gray

White

True Navy

Aubergine

A.

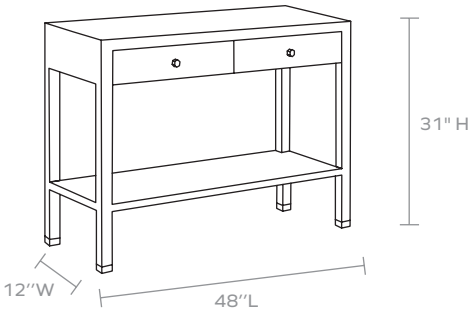

B.

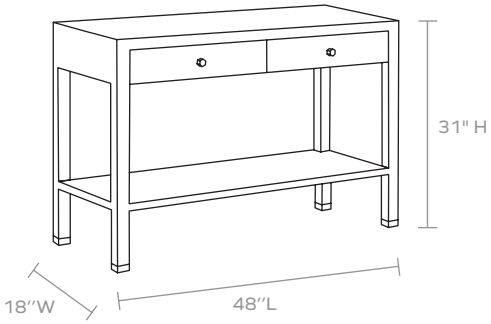

MADE GOODS

JARIN CONSOLE

This traditionally shaped piece, featuring a subtle top lip, comes with generous, sophisticated storage including two drawers and an open shelf. Fully finished in our faux Belgian linen, this latest addition, in both standard size and narrow width, offers a clean look with just the right amount of texture.

MATERIAL
Faux Belgian Linen

DIMENSIONS
A. 48"L x 12"W x 31"H *(Narrow)*
B. 48"L x 18"W x 31"H
C. 60"L x 18"W x 31"H
Floor to Bottom Clearance : 8''

DRAWERS
Number of drawers: 2
Inside drawer: A. 19.75"Lx6.5"Wx3"H
B. 19.75"Lx12.5"Wx3"H
C. 22.75"Lx12.5"Wx3"H
Number of knobs: 2

FREE FLOATING
Yes

WEIGHT
A. 55 lbs
B. 62 lbs
C. 98 lbs

***This item is handcrafted and may show slight variation in size from one piece to another.*

FINISHES

Dark Navy

Designer White

Graphite

Light Gray

White

True Navy

Aubergine

C.